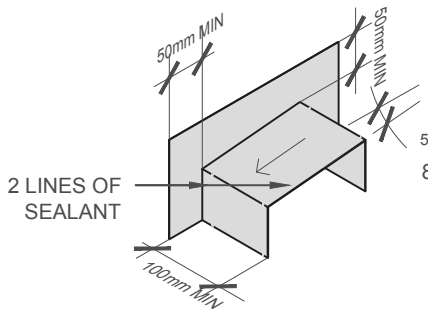

A. SADDLE FLASHING

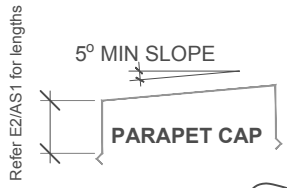

8mm EXPANSION GAP BETWEEN PARAPET CAP AND SADDLE FLASHING - USE MS SEALANT

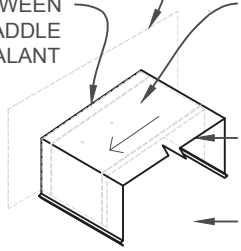

DASHED LINE INDICATES SADDLE FLASHING UNDER

RIVET CAP THROUGH TOP OVER SEALANT BEADS TO SECURE SADDLE FLASHING, SOAKERS AND JOINS.

METAL PARAPET CAP FLASHING FIXED THROUGH THE SIDES.

PARAPETS TO FALL TO INTERIOR SIDE. COVER TO CLADDING AS PER E2/AS1 TABLE 7

B. PARAPET CAP

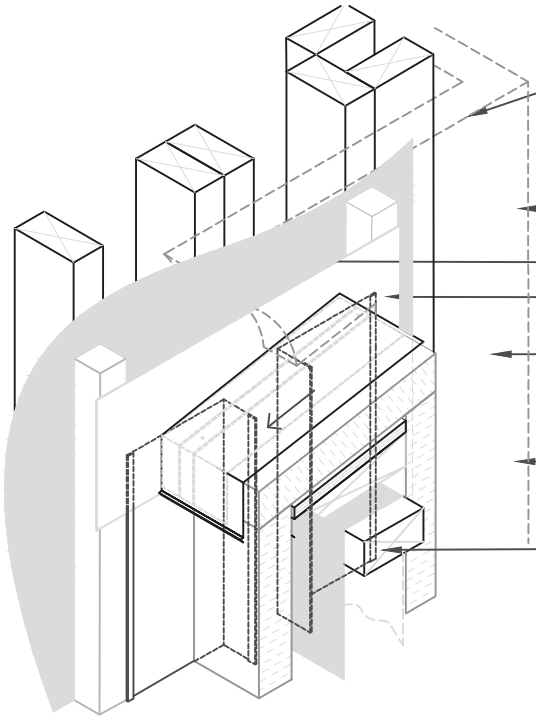

PARAPETS MUST BE OFFSET FROM WALLS RUNNING PARALLEL TO PARAPET WALL TO ALLOW FOR INTERNAL CORNER BACKFLASHINGS

STOPOREN FACADE SYSTEM

WALL UNDERLAY

STO 40mm CAVITY SPACERS

PLACE CAP FLASHING OVER SADDLE FLASHING - REFER TO E2/AS1 FIGURE 12 FOR CAP FIXING DETAILS.

H3.1 CAPPING PLATE CUT TO A FALL WITH FLASHING TAPE OR ROOFING UNDERLAY

INTERNAL CLADDING BACK FLASHING UNDER CLADDING

NOTE: SADDLE FLASHING INSTALLED OVER CLADDING.
WITH BACK FLASHINGS REQUIRED ON TOP OF CAVITY BATTENS TO INTERNAL CORNERS UNDER CLADDING.
CAP FLASHING JOINS INSTALLED OVER SOAKER FLASHINGS WITH MINIMUM 50mm OVER LAP BOTH SIDES WITH 5mm GAP AND 6mm SEALANT BEADS UNDER FLASHING OR 100mm OVERLAPPED JOINTS RIVETED THROUGH SEALANT. REFER FIG. 9 E2/AS1

STOPOREN FACADE	**STOPOREN FACADE (40mm cavity) SYSTEM**	**PP 1023**
	METAL SADDLE FLASHING	**2018**

The information contained on this page is based on our experience and research at the date of issue. The detail is for use by Registered Architects, Licensed Designers or Chartered Engineers to assist in developing project details using Sto Systems. Stoanz Ltd reserve the right to alter or update information at any time without prior notice and it is the responsibility of the designer, project manager or Sto contractor to insure they have and use the current Sto details and specifications on site.